LOW PROFILE RACK GUARD - NPG6-24

APPROX WEIGHT: 10.09 lbs.
DOES NOT INCLUDE WEIGHT OF POWER OR PACKAGING!!!

ANY ADDITIONS, DELETIONS, OR OMISSIONS MUST BE CORRECTED ON THIS DRAWING AS THIS DRAWING WILL BE CONSIDERED ALL INCLUSIVE

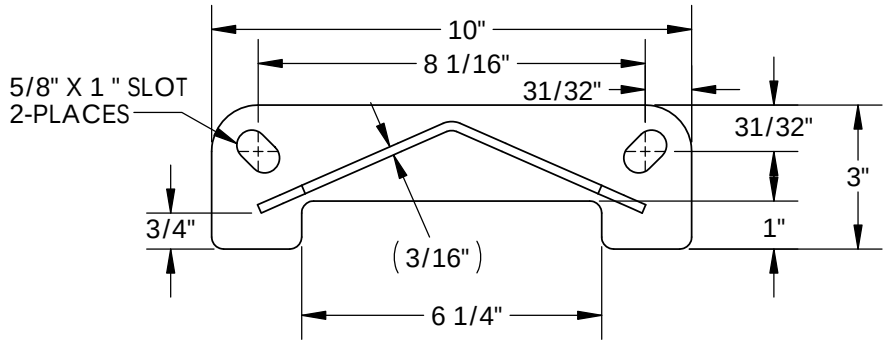

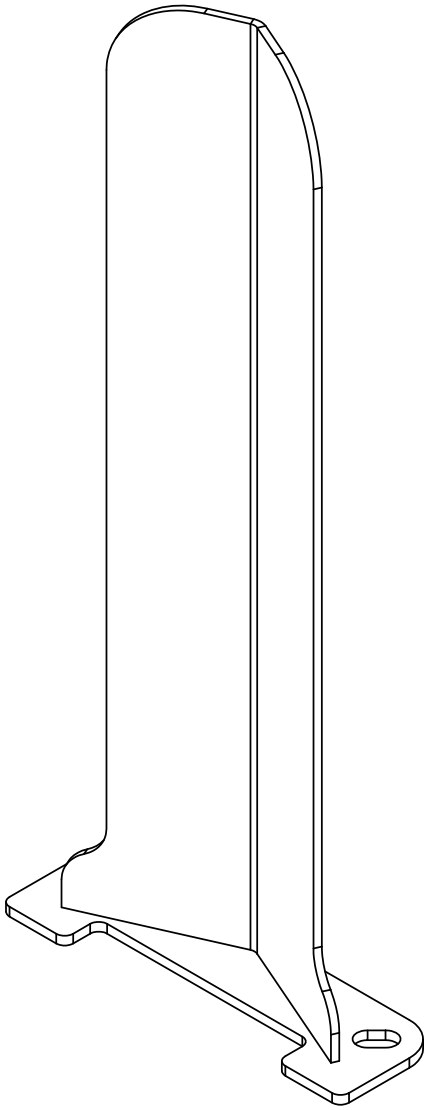

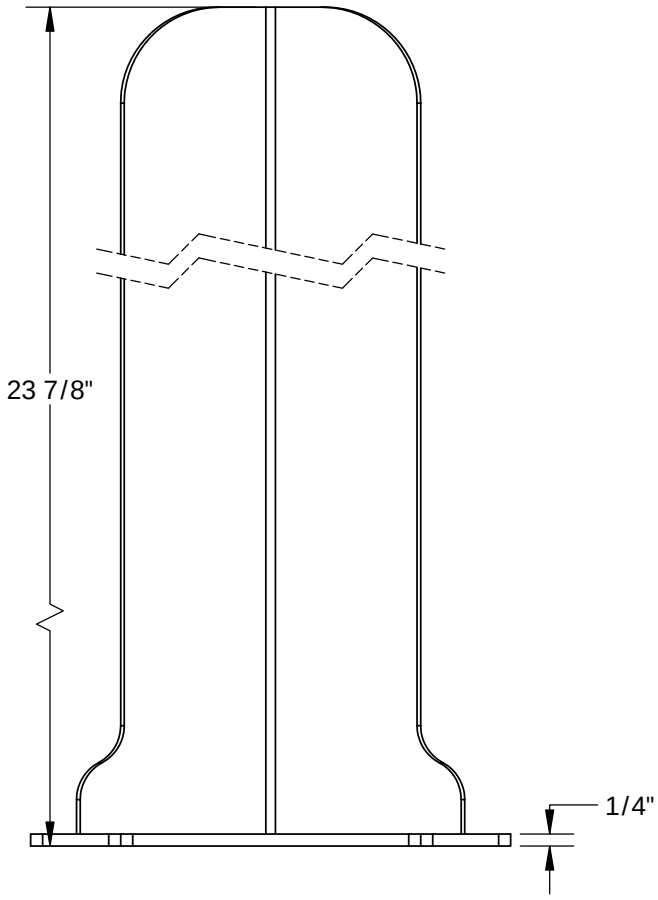

ALL GRAPHICS PROVIDED ARE FOR REFERENCE ONLY. IF CERTAIN DIMENSIONS ARE CRITICAL PLEASE VERIFY THOSE DIMENSIONS WITH YOUR SALESPERSON

DIMENSION TOLERANCE ± 1/4"

FOR INTERNAL USE ONLY PROJECT SIGN OFF	
SALES	
ENG.	
FAB.	
POWER	

STANDARD FEATURES

MODEL NUMBER NPG6-24
BASE PLATE THICKNESS 1/4"
(2) 5/8" X 1" SLOTS
- FOR 1/2 DIA LAGS
OVERALL WIDTH IS 10"
USABLE WIDTH IS 6 1/4"
OVERALL LENGTH IS 3"
USABLE LENGTH IS 1"
OVERALL HEIGHT IS 23 7/8"
UNIT IS POWDER COATED YELLOW

SPECIAL FEATURES

NONE

APPROVAL

I, THE UNDERSIGNED, AGREE THAT THE PRODUCT AS REPRESENTED SATISFIES DESIGN AND DIMENSION REQUIREMENTS. I ALSO ACKNOWLEDGE MY DUTY TO CONFIRM PRODUCT AND INSTALLATION COMPLIANCE WITH ALL APPLICABLE FEDERAL, STATE AND LOCAL REGULATIONS AND STANDARDS.

ALL SPECIAL UNITS ARE NON-RETURNABLE

[ ] As drawn [ ] As marked

Signed:_____ Date:_____

LEAD TIME WILL START UPON RECEIPT OF SIGNED APPROVAL DRAWING

DISTRIBUTOR'S NAME: HOF EQUIPMENT COMPANY PH: 888.990.1150		P.O.# X
		W.O.# X
DRAWN BY: L.GARROW	DATE: 06/10/11	SALES: X
REFERENCE: X	SCALE: 1:4	FILE NAME: 23-007-413
QUOTED LEAD TIME: X	QUOTE # X	